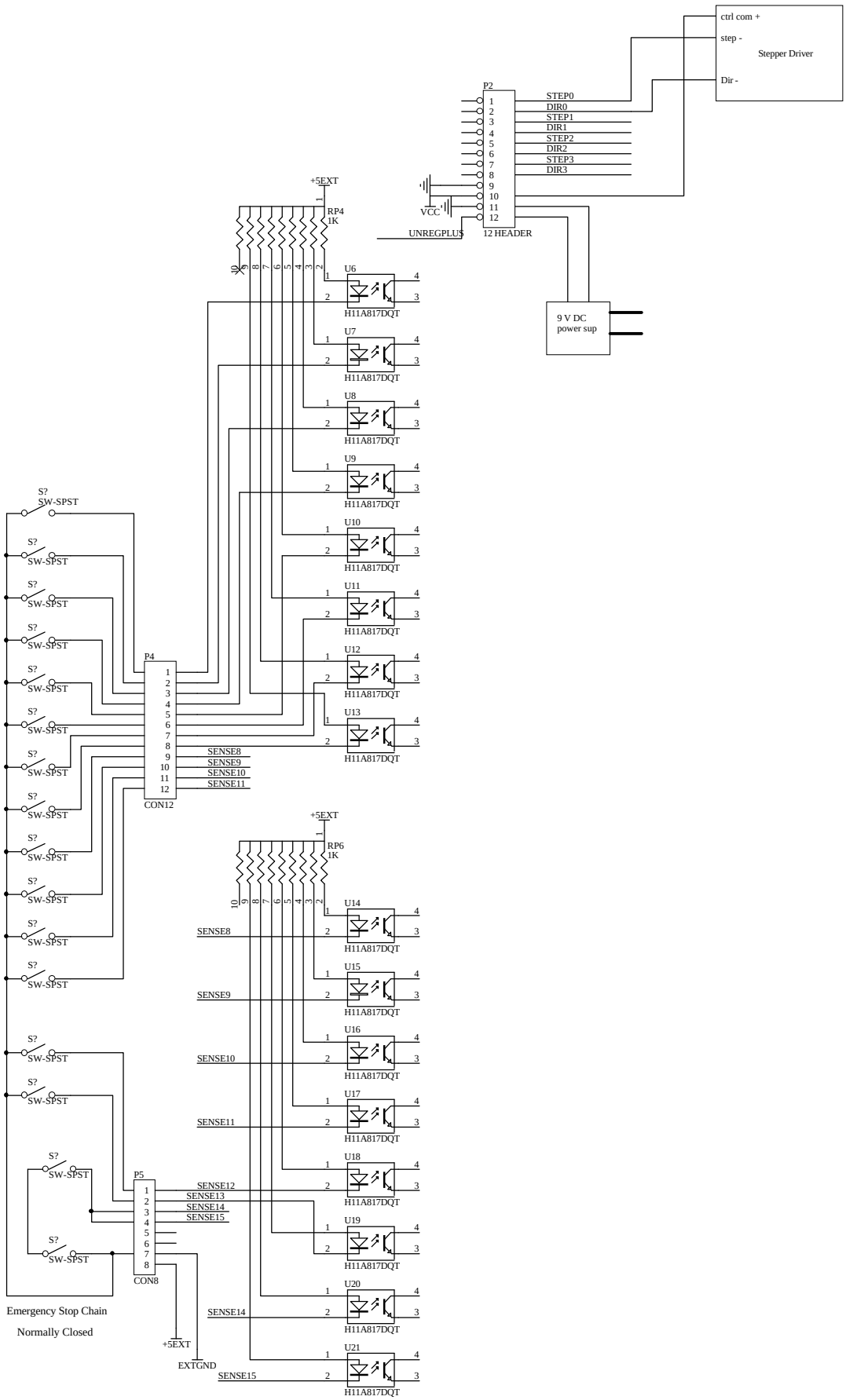

Title
IEEE 1284 Universal Stepper Interface

Size: B | Number: External Connections | Revision: A

File: C:\win31dos\SCHEM\MiniBus\UnivStep.ddb - Documents\UnivUse.Sch

Date: 25-Sep-2002 Time: 00:31:19 | Sheet 3 of 3

Pico Systems
543 Lindeman Rd.
Kirkwood MO 63122
elson@pico-systems.com